PUBLISHED: 21-NOV-2016
2022.0 DEFENDER (LE), 307-01

AUTOMATIC TRANSMISSION/TRANSAXLE - VEHICLES WITH: 8HP70 8-SPEED AUTOMATIC TRANSMISSION AWD

TRANSMISSION FLUID PAN, GASKET AND FILTER (G1947965)

REMOVAL AND INSTALLATION

44.24.05	GASKET-OIL/FLUID PAN - RENEW	3000 CC, TDV6	2.1	USED WITHINS	

PART(S)

STEP	PART NAME	QUANTITY
Installation Step 1	Transmission fluid pan, gasket and filter bolts	1

REMOVAL

NOTE:

Removal steps in this procedure may contain installation details.

transmissionmanuals.com

1. Disconnect the battery ground cable.
Refer to: Specifications (414-00, Specifications).

2. **WARNING:**

Make sure to support the vehicle with axle stands.

Raise and support the vehicle.

3. Drain the transmission.
Refer to: Transmission Fluid Drain and Refill (307-01, General Procedures).

4. **CAUTION:**

Be prepared to collect escaping fluids.

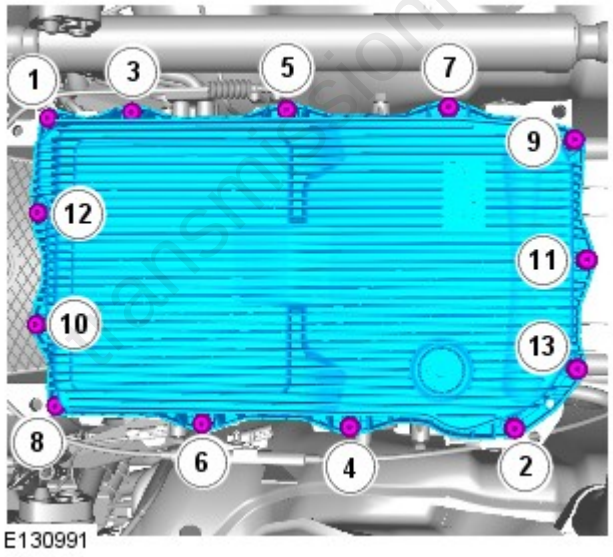

- Remove the component in the sequence shown.
- Discard the components.

INSTALLATION

carmanualsonline.com

1.

CAUTION:

Make sure that the mating faces are clean and free of foreign material.

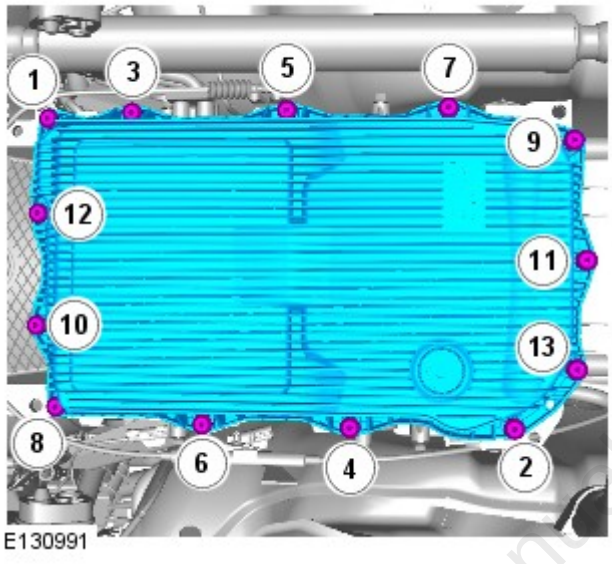

Tighten the bolts in the sequence shown.

Renew Part: *Transmission fluid pan, gasket and filter bolts* *Quantity:* *1* .

Torque: **10 Nm**

2. Refill the transmission.

Refer to: Transmission Fluid Drain and Refill (307-01, General Procedures).

transmissionmanuals.com